## MALE END VIEW

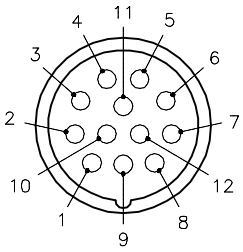


1 = BROWN
2 = N/C
3 = BLUE
4 = WHITE
5 = N/C
6 = GREEN
7 = YELLOW
8 = GRAY
9 = N/C
10 = N/C
11 = N/C
12 = GRN/YEL

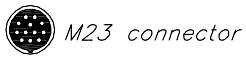
*M23 connector*

## FEMALE END VIEW

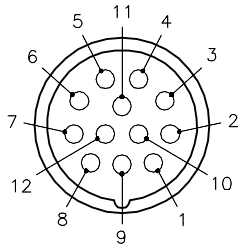


1 = BROWN
2 = N/C
3 = BLUE
4 = WHITE
5 = N/C
6 = GREEN
7 = YELLOW
8 = GRAY
9 = N/C
10 = N/C
11 = N/C
12 = GRN/YEL

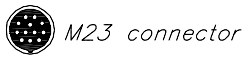
*M23 connector*

## SPECIFICATIONS

| | |
|---|---|
| CONTACT CARRIER MATERIAL | NYLON or PBT |
| MOLDED HEAD MATERIAL/COLOR | TPU/BLACK |
| CONTACT MATERIAL/PLATING | BRASS/GOLD |
| COUPLING NUT MATERIAL/FINISH | STAINLESS STEEL/PASSIVATED |
| RATED CURRENT [A] | 6.0 A |
| RATED VOLTAGE [V] | 300 V |
| OUTER JACKET MATERIAL/COLOR | PVC/YELLOW |
| CONDUCTOR INSULATION MATERIAL | PVC |
| NUMBER OF CONDUCTORS [AWG] | 7x18 AWG |
| DRAIN/SHIELD | 20 AWG/ALUM.-POLYESTER FOIL |
| TEMPERATURE RANGE | -40°C to +105°C (-40°F to +221°F) |
| PROTECTION CLASS | IEC IP67 |
| CABLE RATINGS | UL: ITC/PLTC/AWM, 105C, 300V<br>CSA: CMG/AWM, 105C, 300V |

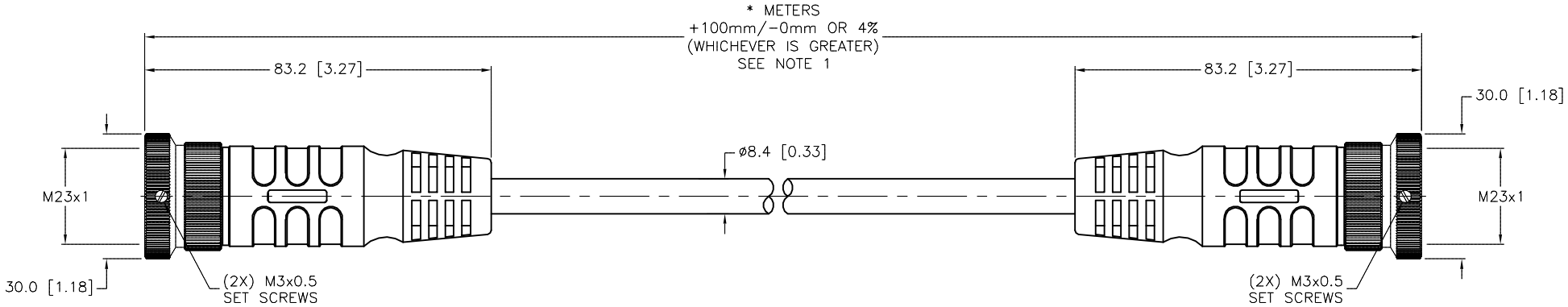


**SOURCE DRAWING - FOR REFERENCE ONLY**

NOTES:

1. "*" INDICATES CABLE LENGTH IN METERS. CONTACT TURCK TO ORDER SPECIFIC LENGTHS.

| REV | DESCRIPTION | BY | DATE | ECO NO. |
|---|---|---|---|---|
| C | DRAWING PROCESSED AS PART OF ECO 33971 | CBM | 04/07/11 | 33971 |

RELATED DOCUMENTS
1.
2.
3.
4.

3RD ANGLE PROJECTION

THIS DRAWING IS CONFIDENTIAL AND THE PROPERTY OF TURCK INC. USE OF THIS DOCUMENT WITHOUT WRITTEN PERMISSION IS PROHIBITED.

TURCK

3000 CAMPUS DRIVE
MINNEAPOLIS, MN 55441
1-800-544-7769
(763) 553-7300
(763) 553-0708 fax
www.turck.us

MATERIAL: SEE SPECIFICATIONS

FINISH: SEE SPECIFICATIONS

ALL DIMENSIONS DISPLAYED ON THIS DRAWING ARE FOR REFERENCE ONLY

CONTACT TURCK FOR MORE INFORMATION

DRFT: RDS | DATE: 03/17/08
APVD: T.S. | SCALE: 1=1.5

UNIT OF MEASUREMENT
**MILLIMETER [ INCH ]**
DO NOT SCALE THIS DRAWING

DESCRIPTION: P-CSMT CKMT 12-637-*

IDENTIFICATION NO.

REV: C

FILE: 777021269

SHEET 1 OF 1

Approved 11/29/2018, work order #179191 by T.S.